NEW-FLOW ISO 9001 REGISTERED

CABLE FLOAT LEVEL SWITCH

LQ SERIES

Technical Data

High Corrosive Liquid Useable
Set Point adjustalbe (max. set point 7)
Multiple Level Set Point available
Float Enclosure Class: IP68
Material: Housing– Aluminum alloy with paint, option available; Float– ABS plastic; Cable– PVC plastic; Flange– PVC, PP, option available; Weight– PVC
Float Size: ø80 x 110mmL
Housing Conduit Size: ¾"NPT(F), option available
Flange Size: 4" (for LQ-01~LQ-05), 6" (for LQ-06~LQ-07), option available
Cable Length: Standard 6M; Option available (max. length 25M)
Working Pressure Limited: maximum 2.5 kg/cm²
Working Temperature Limited: -10°C ~ +50°C
Switch Mode: SPDT mode
Switch Rating: 5A/125VAC, 3A/250VAC, 5A/8V & 14VDC, 4A/30VDC, 0.4A/125VDC

Acting Gap in Fluid

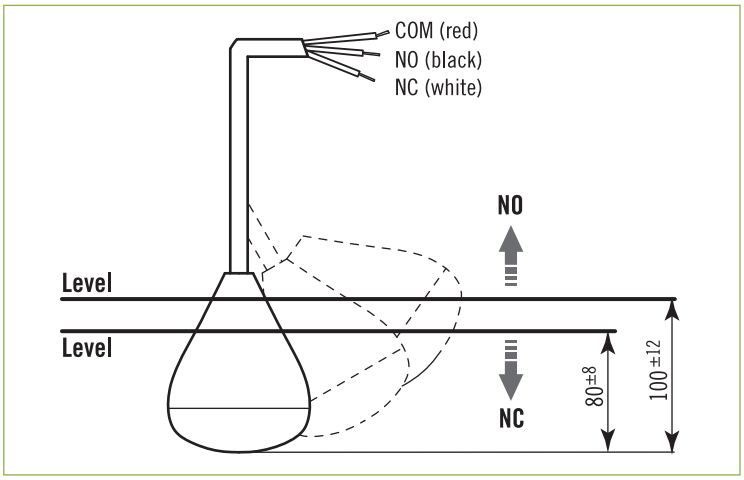

Dimensions for Float & Weight

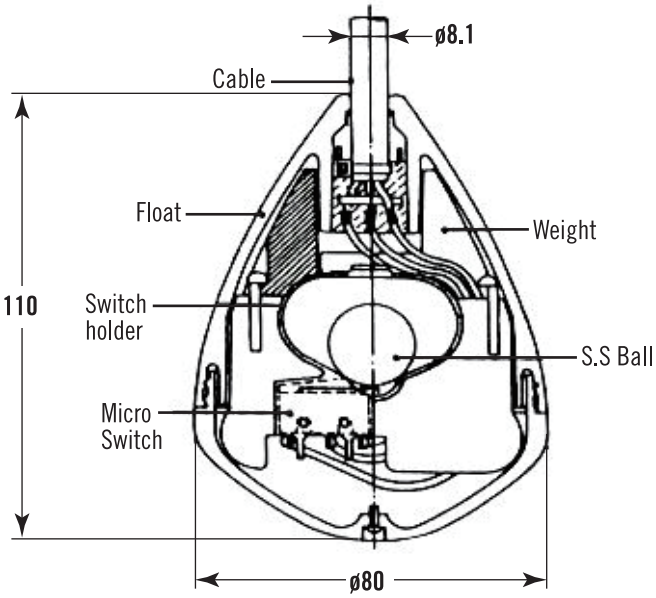

LQ Series Float

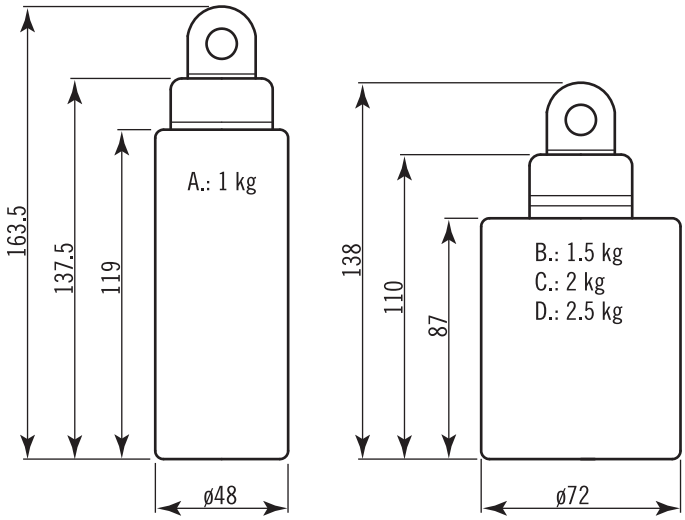

Weight

Model & Dimensions (mm)

LQ-00	LQ-01	LQ-02	LQ-03	LQ-04
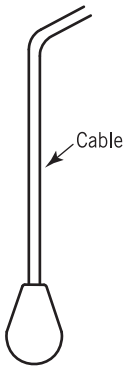	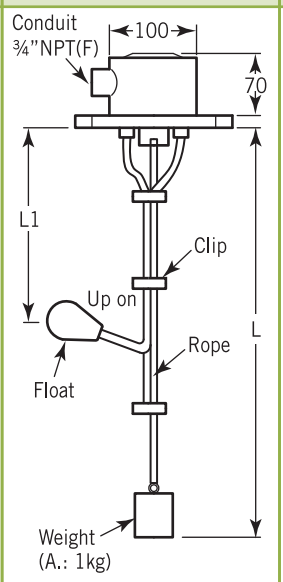	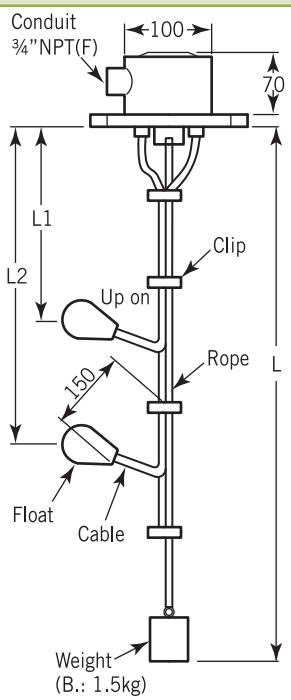	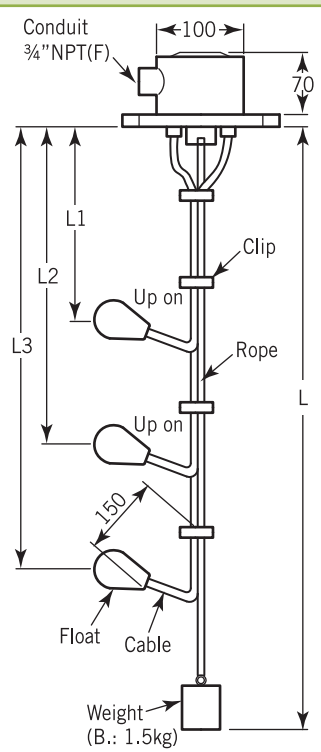	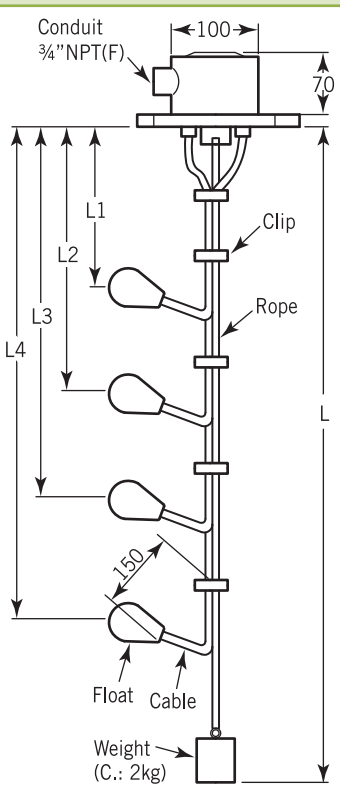

LQ-05	LQ-06	LQ-07
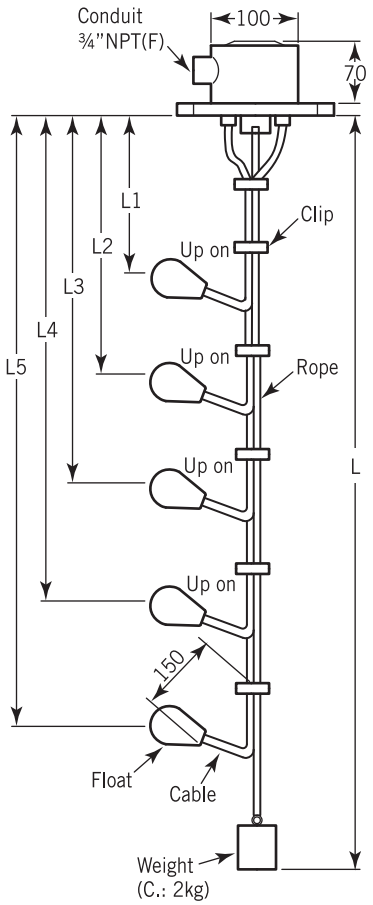	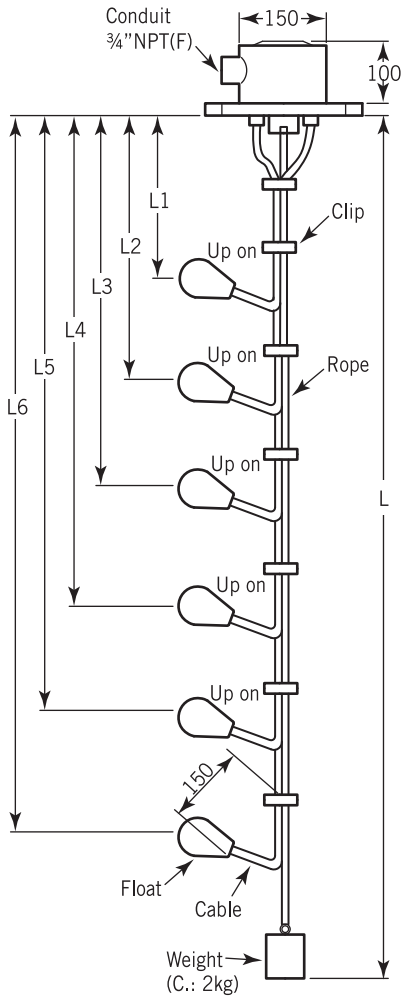	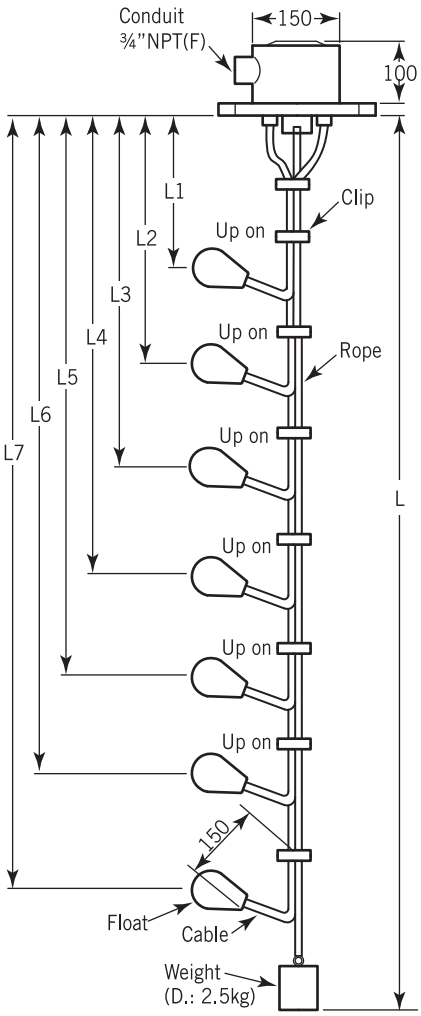

NOTE. For model LQ-01~LQ-05: flange size is equal or more than 4"; For model LQ-06~LQ-07: flange size is equal or more than 6".

Ordering Information

LQ	Code	Model
	00	only float, wihtout housing
	01	one float
	02	two float
	03	three float
	04	four float
	05	five float
	06	six float
	07	seven float

Code	Housing Material
A	Aluminum alloy with paint
S	option
0	Without housing (for LQ-00)

Code	Float Material
A	ABS plastic

Code	Cable Material
P	PVC plastic

Code	Flange Material
	(1) PVC (2) PP (3) option

Code	Housing Conduit Size
	(1) standard ¾"NPT(F) (0) option

Code	Flange Size
	(1) 4" (2) 6" (3) option

Code	Flange Rating
1	ANSI 150#
2	JIS 10K
3	option

Code	Cable Length
S	6 Meters, standard
0	option, plesae fill in your request length (max. 25 Meters)

Code	Total Length
	L=_____mm

Code	Setting Point & Switch Acting Functions
	Please fill in the requested length: L_1=_____mm, L_2=_____mm L_3=_____mm, L_4=_____mm L_5=_____mm, L_6=_____mm L_7=_____mm

LQ												Complete ordering code

Golden Mountain Enterprise Co., Ltd.
No. 3 Lane 296 Hsin-Ya Rd. Chien Chen Dist. Kaohsiung 806, Taiwan ROC
TEL: 886-7-8135500 FAX: 886-7-8225588
E-mail: info@new-flow.com http://www.new-flow.com